T-rex 250 Part Finder - 02-22-2010

Please download and use the PDF version. Save it to your desktop.

Click HERE to claim your 10% discount on T-rex parts. You only need to do this once per order.

Ron's Heliproz South

T-rex 250 Parts Finder

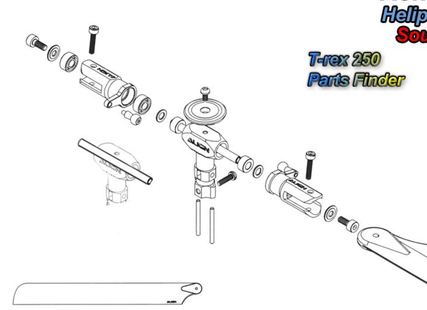

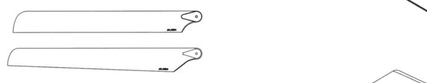

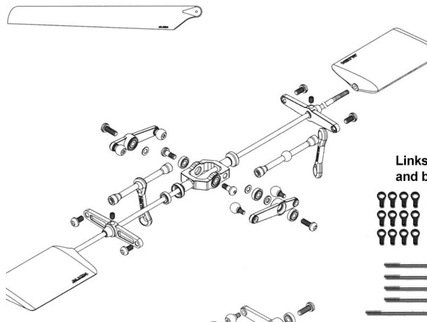
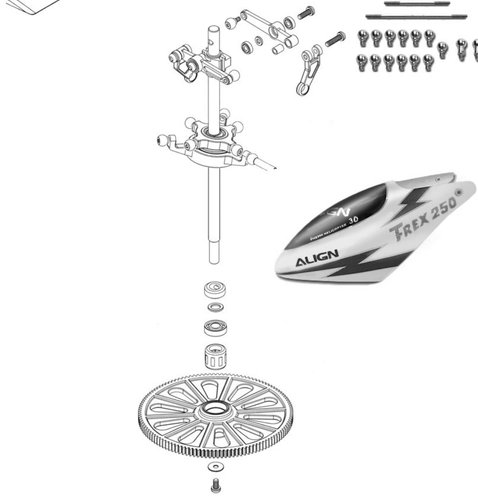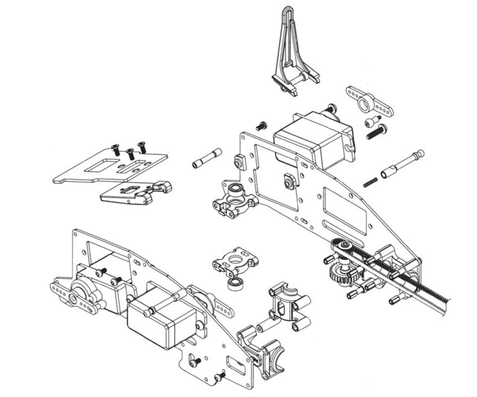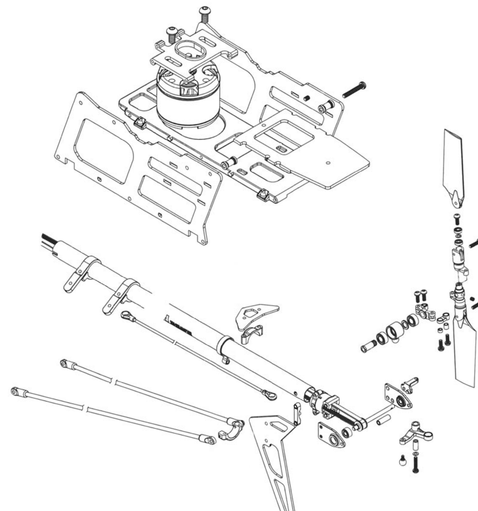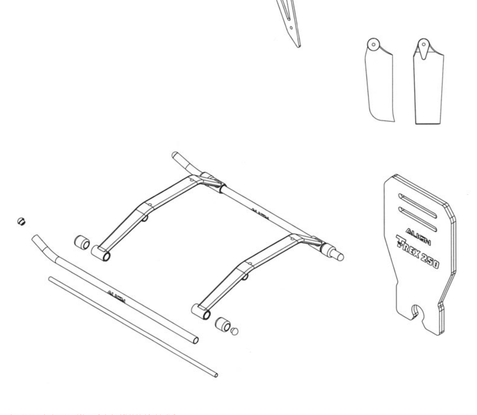
Links , rods and balls